TC1240/TC1240A

Positive Doubling Charge Pumps with Shutdown in a SOT-23 Package

Features

- Charge Pumps in 6-Pin SOT-23A Package
- >99% Typical Voltage Conversion Efficiency
- Voltage Doubling
- Input Voltage Range, TC1240: +2.5V to +4.0V, TC1240A: +2.5V to +5.5V
- Low Output Resistance, TC1240: 17Ω (Typical) TC1240A: 12Ω (Typical)
- Only Two External Capacitors Required
- Low Supply Current, TC1240: 180 µA (Typical) TC1240A: 550 µA (Typical)
- Power-Saving Shutdown Mode (1 µA Maximum)
- Shutdown Input Fully Compatible with 1.8V Logic Systems

Applications

- Cellular Phones
- Pagers
- PDAs, Portable Data Loggers
- Battery Powered Devices
- Handheld Instruments

Package Type

6-Pin SOT-23A

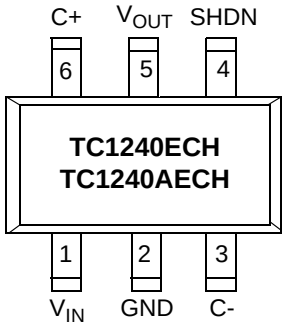

NOTE: 6-Pin SOT-23A is equivalent to the EIAJ (SC-74A)

General Description

The TC1240/TC1240A is a doubling CMOS charge pump voltage converter in a small 6-Pin SOT-23A package. The TC1240 doubles an input voltage that can range from +2.5V to +4.0V, while the TC1240A doubles an input voltage that can range from +2.5V to +5.5V. Conversion efficiency is typically >99%. Internal oscillator frequency is 160 kHz for both devices. The TC1240 and TC1240A have an active-high shutdown that limits the current consumption of the devices to less than 1 µA.

External component requirement is only two capacitors for standard voltage doubler applications. All other circuitry (including control, oscillator and power MOSFETs) are integrated on-chip. Typical supply current is 180 µA for the TC1240 and 550 µA for the TC1240A. Both devices are available in a 6-Pin SOT-23A surface mount package.

Typical Application Circuit

Positive Voltage Doubler

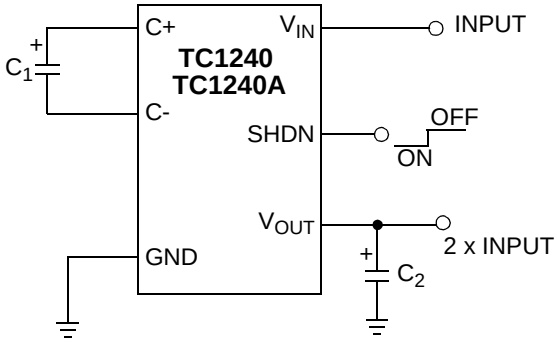

© 2001-2012 Microchip Technology Inc.

1.0 ELECTRICAL CHARACTERISTICS

Absolute Maximum Ratings †

Input Voltage (V_{IN} to GND)
- TC1240 ..... +4.5V, -0.3V
- TC1240A ..... +5.8V, -0.3V

Output Voltage (V_{OUT} to GND)
- TC1240 ..... +9.0V, V_{IN} -0.3V
- TC1240A ..... +11.6V, V_{IN} -0.3V

Current at V_{OUT} Pin.....50 mA

Short-Circuit Duration: V_{OUT} to GND .....Indefinite

Thermal Resistance .....210°C/W

Power Dissipation (T_A = +25°C).....600 mW

Operating Temperature Range.....-40°C to +85°C

Storage Temperature (Unbiased) .....-65°C to +150°C

† Stresses above those listed under “Absolute Maximum Ratings” may cause permanent damage to the device. These are stress ratings only and functional operation of the device at these or any other conditions above those indicated in the operation sections of the specifications is not implied. Exposure to Absolute Maximum Rating conditions for extended periods may affect device reliability.

TC1240 ELECTRICAL SPECIFICATIONS

Electrical Specifications: Unless otherwise noted, typical values apply at T_A = +25°C. Minimum and maximum values apply for T_A = -40° to +85°C, and V_{IN} = +2.8V, C_1 = C_2 = 3.3 µF, SHDN = GND.

Parameters	Sym	Min	Typ	Max	Units	Conditions
Supply Current	I_{DD}	—	180	300	µA	R_{LOAD} = ∞
Shutdown Supply Current	I_{SHDN}	—	0.1	1.0	µA	SHDN = V_{IN}
Minimum Supply Voltage	V_{MIN}	2.5	—	—	V	R_{LOAD} = 1.0 kΩ
Maximum Supply Voltage	V_{MAX}	—	—	4.0	V	R_{LOAD} = 1.0 kΩ
Oscillator Frequency	F_{OSC}	—	160	—	kHz	T_A = -40°C to +85°C
Switching Frequency **(Note 1)**	F_{SW}	40	80	125	kHz	T_A = -40°C to +85°C
Shutdown Input Logic High	V_{IH}	1.4	—	—	V	V_{IN} = V_{MIN} to V_{MAX}
Shutdown Input Logic Low	V_{IL}	—	—	0.4	V	V_{IN} = V_{MIN} to V_{MAX}
Power Efficiency	P_{EFF}	86	93	—	%	R_{LOAD} = 1.0 kΩ
Voltage Conversion Efficiency	V_{EFF}	97.5	99.96	—	%	R_{LOAD} = ∞
Output Resistance **(Note 2)**	R_{OUT}	— —	17 —	— 30	Ω	R_{LOAD} = 1.0 kΩ T_A = -40°C to +85°C

Note 1: Switching frequency is one-half internal oscillator frequency.

2: Capacitor contribution is approximately 26% of the output impedance [ESR = 1 / switching frequency x capacitance].

© 2001-2012 Microchip Technology Inc.

TC1240A ELECTRICAL SPECIFICATIONS

Electrical Specifications: Unless otherwise noted, typical values apply at T_A = +25°C. Minimum and maximum values apply for T_A = -40° to +85°C, and V_{IN} = +5.0V, C_1 = C_2 = 3.3 µF, SHDN = GND.

Parameters	Sym	Min	Typ	Max	Units	Conditions
Supply Current	I_{DD}	—	550	900	µA	$R_{LOAD} = \infty$
Shutdown Supply Current	I_{SHDN}	—	0.01	1.0	µA	SHDN = V_{IN}
Minimum Supply Voltage	V_{MIN}	2.5	—	—	V	
Maximum Supply Voltage	V_{MAX}	—	—	5.5	V	
Output Current	I_{LOAD}	20	—	—	mA	
Sum of the $R_{DS(ON)}$ of the internal MOSFET Switches	R_{SW}	—	4	8	Ω	I_{LOAD} = 20 mA
Oscillator Frequency	F_{OSC}	—	160	—	kHz	T_A = -40°C to +85°C
Switching Frequency **(Note 1)**	F_{SW}	40	80	125	kHz	T_A = -40°C to +85°C
Shutdown Input Logic High	V_{IH}	1.4	—	—	V	$V_{IN} = V_{MIN}$ to V_{MAX}
Shutdown Input Logic Low	V_{IL}	—	—	0.4	V	$V_{IN} = V_{MIN}$ to V_{MAX}
Power Efficiency	P_{EFF}	86	94	—	%	I_{LOAD} = 5 mA
Voltage Conversion Efficiency	V_{EFF}	99	99.96	—	%	$R_{LOAD} = \infty$
Output Resistance **(Note 2)**	R_{OUT}	— —	12 —	— 25	Ω	I_{LOAD} = 20 µA T_A = -40°C to +85°C

Note 1: Switching frequency is one-half internal oscillator frequency.

2: Capacitor contribution is approximately 26% of the output impedance [ESR = 1 / switching frequency x capacitance].

© 2001-2012 Microchip Technology Inc.

2.0 TYPICAL PERFORMANCE CURVES

Note:	The graphs and tables provided following this note are a statistical summary based on a limited number of samples and are provided for informational purposes only. The performance characteristics listed herein are not tested or guaranteed. In some graphs or tables, the data presented may be outside the specified operating range (e.g., outside specified power supply range) and therefore outside the warranted range.

Note: Unless otherwise indicated, typical values apply at T_A = +25°C.

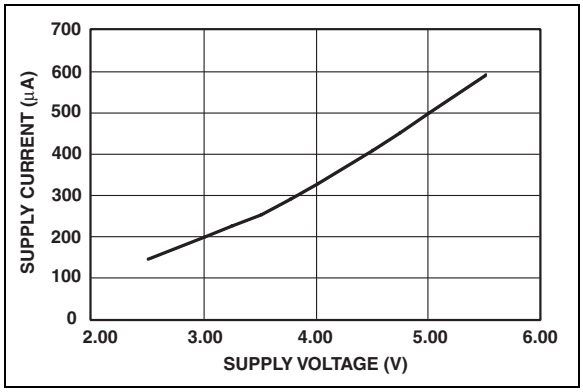

FIGURE 2-1: *Supply Current vs. Supply Voltage (No Load).*

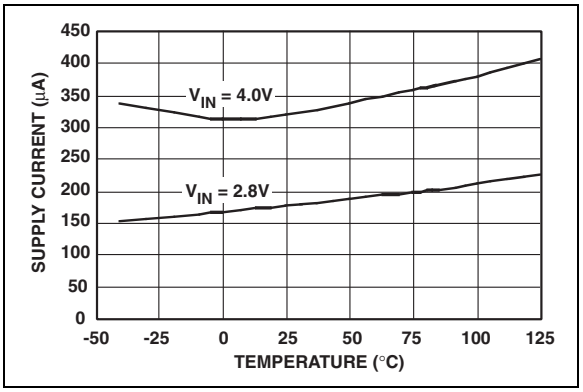

FIGURE 2-4: *Supply Current vs. Temperature (No Load).*

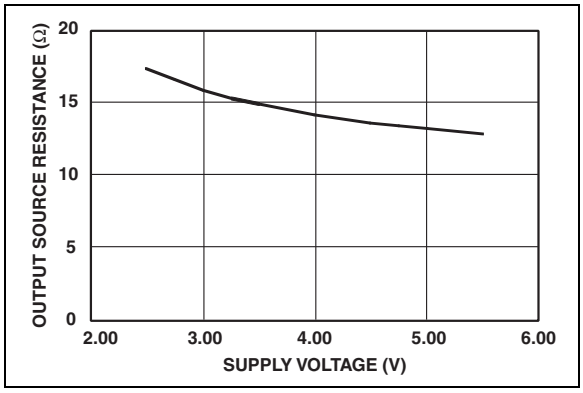

FIGURE 2-2: *Output Source Resistance vs. Supply Voltage (with R_{LOAD} = 1 kΩ)*

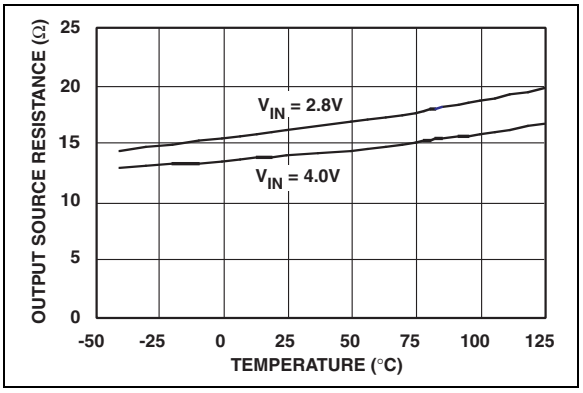

FIGURE 2-5: *Output Source Resistance vs. Temperature (with R_{LOAD} = 1 kΩ).*

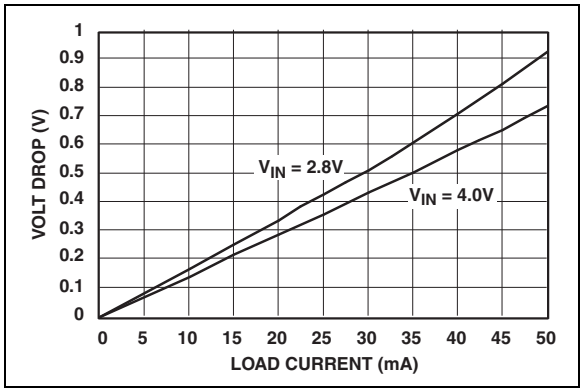

FIGURE 2-3: *Output Voltage Drop vs. Load Current.*

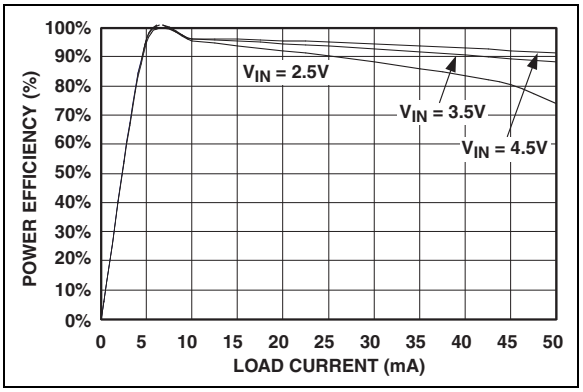

FIGURE 2-6: *Power Efficiency vs. Load Current.*

© 2001-2012 Microchip Technology Inc.

Note: Unless otherwise indicated, typical values apply at T_A = +25°C.

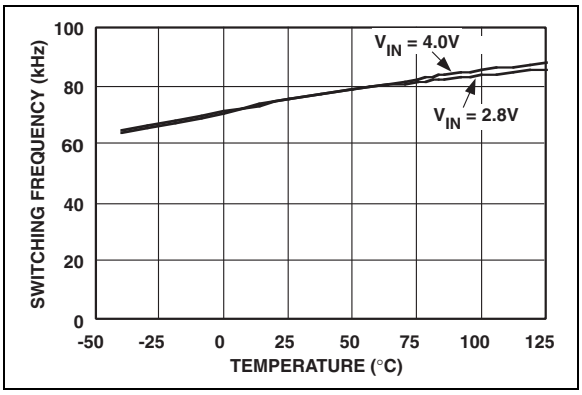

FIGURE 2-7: *Switching Frequency vs. Temperature.*

3.0 PIN DESCRIPTION

The description of the pins are listed in Table 3-1.

TABLE 3-1: PIN FUNCTION TABLE

Pin No.	Symbol	Description
1	V_{IN}	Power supply input
2	GND	Ground
3	C-	Commutation capacitor negative terminal
4	SHDN	Shutdown input (active high)
5	V_{OUT}	Doubled output voltage
6	C+	Commutation capacitor positive terminal

© 2001-2012 Microchip Technology Inc.

4.0 DETAILED DESCRIPTION

The TC1240/TC1240A charge pump converter doubles the voltage applied to the V_{IN} pin. Conversion consists of a two-phase operation (Figure 4-1). During the first phase, switches S_2 and S_4 are open and S_1 and S_3 are closed. During this time, C_1 charges to the voltage on V_{IN} and load current is supplied from C_2. During the second phase, S_2 and S_4 are closed, while S_1 and S_3 are open.

During this second phase, C_1 is level-shifted upward by V_{IN} volts. This connects C_1 to the reservoir capacitor C_2, allowing energy to be delivered to the output as needed. The actual voltage is slightly lower than 2 x V_{IN} since the four switches (S_1-S_4) have an on-resistance and the load drains charge from reservoir capacitor C_2.

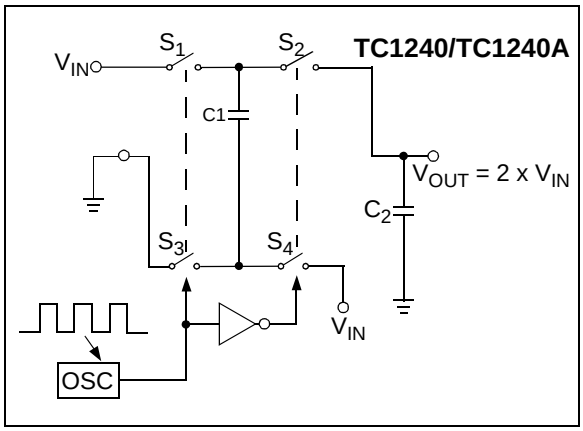

FIGURE 4-1: *Ideal Switched Capacitor Charge Pump Doubler.*

5.0 TYPICAL APPLICATIONS

5.1 Output Voltage Considerations

The TC1240/TC1240A performs voltage doubling but does not provide regulation. The output voltage will droop in a linear manner with respect to load current. The value of this equivalent output resistance is approximately 12Ω nominal at +25°C and V_{IN} = +5.0V for the TC1240A and 17Ω nominal at +25°C and V_{IN} = +2.8V for the TC1240. V_{OUT} is approximately +10.0V at light loads for the TC1240A and +5.6V for the TC1240, and droops according to the equation below:

EQUATION

$$V_{DROOP} = I_{OUT} \times R_{OUT}$$
$$V_{OUT} = 2 \times V_{IN} - V_{DROOP}$$

5.2 Charge Pump Efficiency

The overall power efficiency of the charge pump is affected by four factors:

1. Losses from power consumed by the internal oscillator, switch drive, etc. (which vary with input voltage, temperature and oscillator frequency).
2. I^2R losses due to the on-resistance of the MOSFET switches on-board the charge pump.
3. Charge pump capacitor losses due to effective series resistance (ESR).
4. Losses that occur during charge transfer (from commutation capacitor to the output capacitor) when a voltage difference between the two capacitors exist.

Most of the conversion losses are due to factors (2) and (3) above. These losses are given by Equation 5-1.

EQUATION 5-1:

a) $P_{LOSS(2,3)} = I_{OUT}^2 \times R_{OUT}$

b) $R_{OUT} = \left[\frac{1}{F_{SW}(C_1)}\right] + 8R_{SWITCH} + 4ESR_{C1} + ESR_{C2}$

The switching frequency in Equation 5-1b is defined as one-half the oscillator frequency (i.e., $F_{SW} = F_{OSC}/2$). The $1/(F_{SW})(C_1)$ term in Equation 5-1b is the effective output resistance of an ideal switched capacitor circuit (Figure 5-1 and Figure 5-2).

The output voltage ripple is given by Equation 5-2.

EQUATION 5-2:

$$V_{RIPPLE} = \frac{I_{OUT}}{2(F_{SW})(C_2)} + 2(I_{OUT})(ESR_{C2})$$

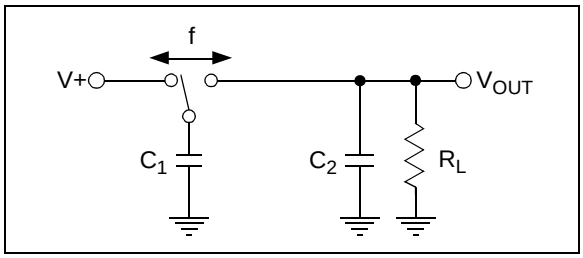

FIGURE 5-1: *Ideal Switched Capacitor Model.*

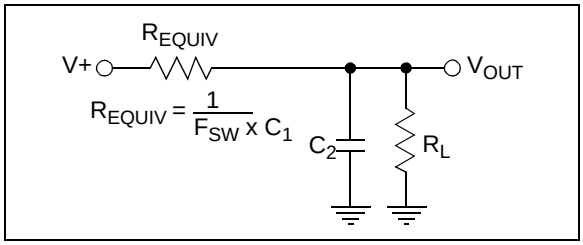

FIGURE 5-2: *Equivalent Output Resistance.*

5.3 Capacitor Selection

In order to maintain the lowest output resistance and output ripple voltage, it is recommended that low ESR capacitors be used. Additionally, larger values of C_1 will lower the output resistance and larger values of C_2 will reduce output ripple (see Equation 5-1b).

Table 5-1 shows various values of C_1 and the corresponding output resistance values @ +25°C. It assumes a 0.1Ω ESR_{C1} and 0.9Ω R_{SW}. Table 5-2 shows the output voltage ripple for various values of C_2. The V_{RIPPLE} values assume 5mA output load current and 0.1Ω ESR_{C2}.

TABLE 5-1: OUTPUT RESISTANCE VS. C_1 (ESR = 0.1Ω)

C_1 (µF)	TC1240 R_{OUT}(Ω)	TC1240A R_{OUT}(Ω)
0.47	47	35
1	28.5	20.5
2.2	19.5	14
3.3	17	12
4.7	15.5	10.5
10	13.6	9.3
47	12.5	8.3
100	12.2	8.1

TABLE 5-2: OUTPUT VOLTAGE RIPPLE VS. C_2 (ESR = 0.1Ω) I_{OUT} 5 mA

C_1 (µF)	TC1240/TC1240A V_{RIPPLE} (mV)
0.47	142
1	67
2.2	30
3.3	20
4.7	14
10	6.7
47	2.5
100	1.6

© 2001-2012 Microchip Technology Inc.

5.4 Input Supply Bypassing

The V_{IN} input should be capacitively bypassed to reduce AC impedance and minimize noise effects due to the switching internal to the device. The recommended capacitor should be a large value (at least equal to C_1) connected from the input to GND.

5.5 Shutdown Input

The TC1240 and TC1240A are disabled when SHDN is high, and enabled when SHDN is low. This input cannot be allowed to float.

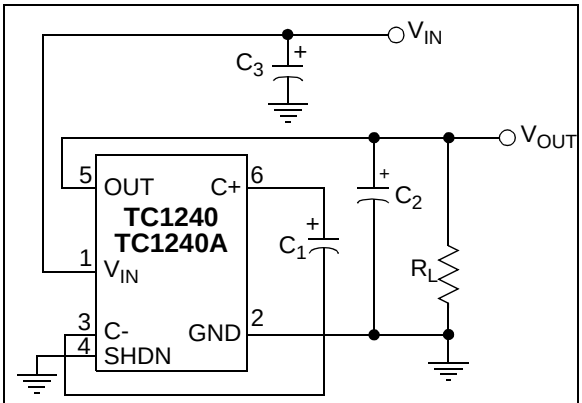

Device	C_1	C_2	C_3
TC1240 TC1240A	3.3 µF	3.3 µF	3.3 µF

FIGURE 5-3: *Test Circuit.*

5.6 Voltage Doubler

The most common application for charge pump devices is the doubler (Figure 5-3). This application uses two external capacitors – C_1 and C_2 (plus a power supply bypass capacitor, if necessary). The output is equal to 2 x V_{IN} minus any voltage drops due to loading. Refer to Table 5-1 and Table 5-2 for capacitor selection.

© 2001-2012 Microchip Technology Inc.

5.7 Cascading Devices

Two or more TC1240/TC1240As can be cascaded to increase output voltage (Figure 5-4). If the output is lightly loaded, it will be close to ((n + 1) x V_{IN}), but will droop at least by R_{OUT} of the first device multiplied by the I_Q of the second. It can be seen that the output resistance rises rapidly for multiple cascaded devices. For the case of the two-stage 'tripler', output resistance can be approximated as $R_{OUT} = 2 \times R_{OUT1} + R_{OUT2}$, where R_{OUT1} is the output resistance of the first stage and R_{OUT2} is the output resistance of the second stage.

5.8 Paralleling Devices

To reduce the value of R_{OUT}, multiple TC1240/TC1240As can be connected in parallel (Figure 5-5). The output resistance will be reduced by a factor of N, where N is the number of TC1240/TC1240As. Each device will require its own pump capacitor (C1x), but all devices may share one reservoir capacitor (C2). However, to preserve ripple performance, the value of C2 should be scaled according to the number of paralled TC1240/TC1240As, respectively.

5.9 Layout Considerations

As with any switching power supply circuit good layout practice is recommended. Mount components as close together as possible to minimize stray inductance and capacitance. Also use a large ground plane to minimize noise leakage into other circuitry.

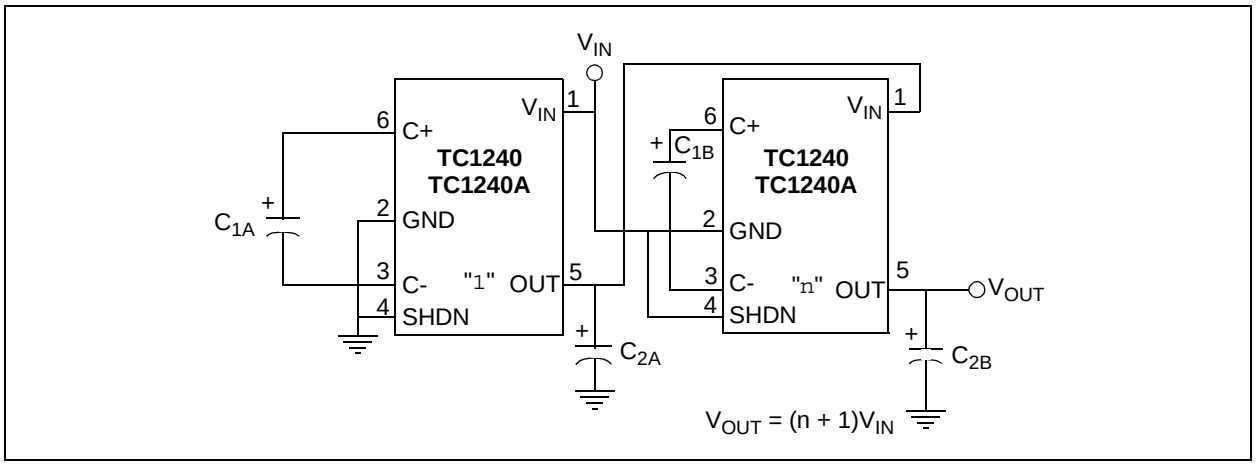

FIGURE 5-4: *Cascading Multiple Devices To Increase Output Voltage.*

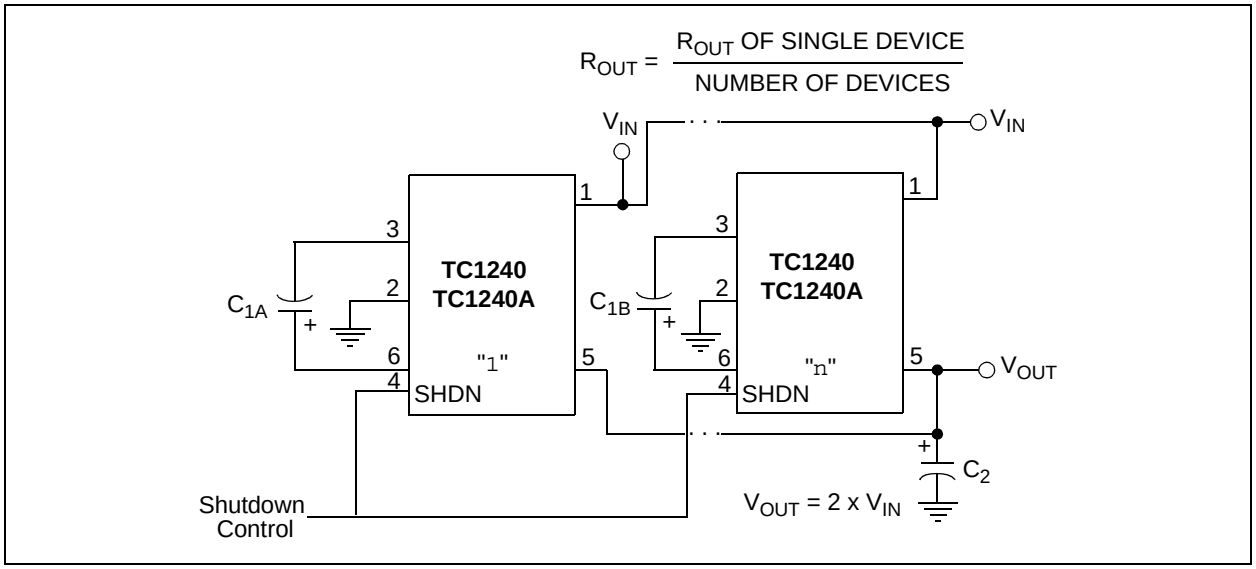

FIGURE 5-5: *Paralleling Multiple Devices To Reduce Output Resistance.*

© 2001-2012 Microchip Technology Inc.

6.0 PACKAGING INFORMATION

6.1 Package Marking Information

6-Pin SOT-23A

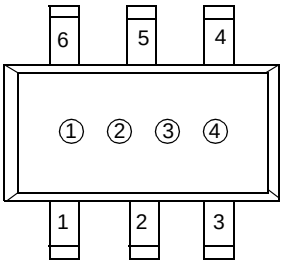

① & ② = part number code + temperature range (two-digit code)

Device	Code
TC1240	DN
TC1240A	EN

ex: 1240AECH =Ⓔ Ⓝ ◯ ◯

③ represents year and 2-month code

④ represents production lot ID code

6-Lead Plastic Small Outline Transistor (CH) (SOT-23)

Note: For the most current package drawings, please see the Microchip Packaging Specification located at http://www.microchip.com/packaging

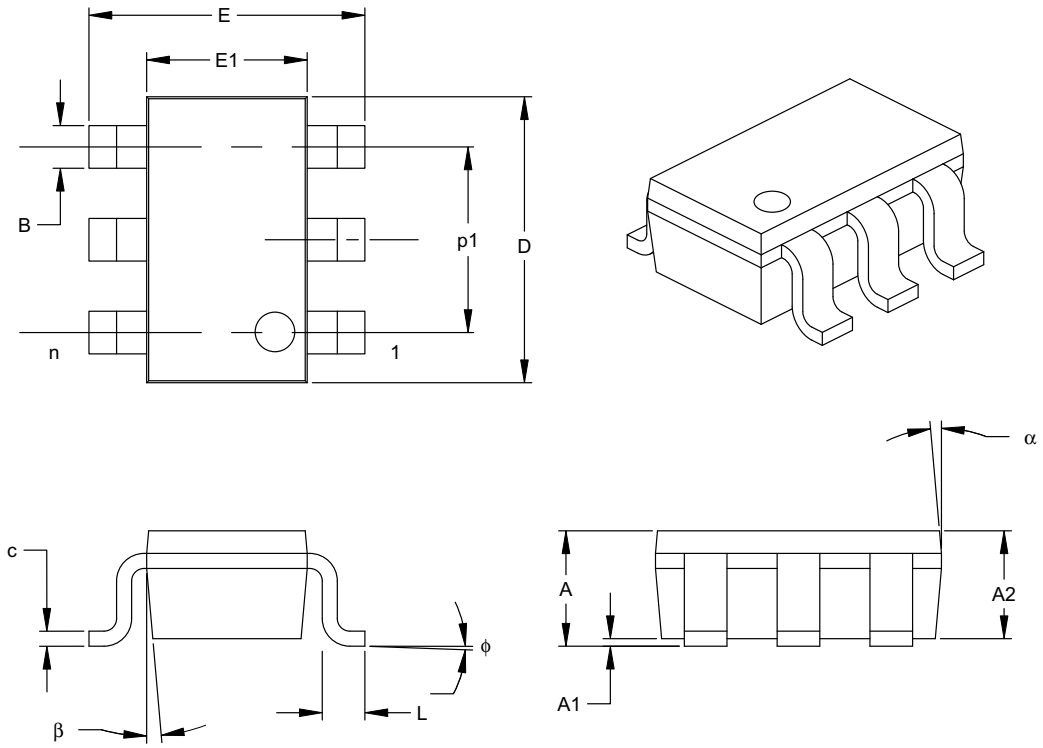

Units		INCHES*			MILLIMETERS		
Dimension Limits		MIN	NOM	MAX	MIN	NOM	MAX
Number of Pins	n		6			6	
Pitch	p		.038			0.95	
Outside lead pitch (basic)	p1		.075			1.90	
Overall Height	A	.035	.046	.057	0.90	1.18	1.45
Molded Package Thickness	A2	.035	.043	.051	0.90	1.10	1.30
Standoff	A1	.000	.003	.006	0.00	0.08	0.15
Overall Width	E	.102	.110	.118	2.60	2.80	3.00
Molded Package Width	E1	.059	.064	.069	1.50	1.63	1.75
Overall Length	D	.110	.116	.122	2.80	2.95	3.10
Foot Length	L	.014	.018	.022	0.35	0.45	0.55
Foot Angle	ϕ	0	5	10	0	5	10
Lead Thickness	c	.004	.006	.008	0.09	0.15	0.20
Lead Width	B	.014	.017	.020	0.35	0.43	0.50
Mold Draft Angle Top	α	0	5	10	0	5	10
Mold Draft Angle Bottom	β	0	5	10	0	5	10

*Controlling Parameter

Notes:

Dimensions D and E1 do not include mold flash or protrusions. Mold flash or protrusions shall not exceed .005" (0.127mm) per side.

JEITA (formerly EIAJ) equivalent: SC-74A

Drawing No. C04-120

© 2001-2012 Microchip Technology Inc.

7.0 REVISION HISTORY

Revision D (December 2012)

Added a note to each package outline drawing.

NOTES:

© 2001-2012 Microchip Technology Inc.

PRODUCT IDENTIFICATION SYSTEM

To order or obtain information, e.g., on pricing or delivery, refer to the factory or the listed sales office.

PART NO.	X	/XX
Device	Temperature Range	Package

Device	TC1240:	Positive Doubling Charge Pump with Shutdown
	TC1240A	Positive Doubling Charge Pump with Shutdown
Temperature Range	I =	-40°C to +85°C (Industrial)
Package	CHTR: =	6L SOT-23, Tape and Reel

Examples:

a) TC1240ECHTR: Tape and Reel, 6L SOT-23 (EIAJ)

b) TC1240AECHTR: Tape and Reel, 6L SOT-23 (EIAJ)

Sales and Support

Data Sheets

Products supported by a preliminary Data Sheet may have an errata sheet describing minor operational differences and recommended workarounds. To determine if an errata sheet exists for a particular device, please contact one of the following:

1. Your local Microchip sales office
2. The Microchip Worldwide Site (www.microchip.com)

Please specify which device, revision of silicon and Data Sheet (include Literature #) you are using.

Customer Notification System

Register on our web site (www.microchip.com/cn) to receive the most current information on our products.

NOTES:

© 2001-2012 Microchip Technology Inc.

Note the following details of the code protection feature on Microchip devices:

- Microchip products meet the specification contained in their particular Microchip Data Sheet.
- Microchip believes that its family of products is one of the most secure families of its kind on the market today, when used in the intended manner and under normal conditions.
- There are dishonest and possibly illegal methods used to breach the code protection feature. All of these methods, to our knowledge, require using the Microchip products in a manner outside the operating specifications contained in Microchip's Data Sheets. Most likely, the person doing so is engaged in theft of intellectual property.
- Microchip is willing to work with the customer who is concerned about the integrity of their code.
- Neither Microchip nor any other semiconductor manufacturer can guarantee the security of their code. Code protection does not mean that we are guaranteeing the product as "unbreakable."

Code protection is constantly evolving. We at Microchip are committed to continuously improving the code protection features of our products. Attempts to break Microchip's code protection feature may be a violation of the Digital Millennium Copyright Act. If such acts allow unauthorized access to your software or other copyrighted work, you may have a right to sue for relief under that Act.

Information contained in this publication regarding device applications and the like is provided only for your convenience and may be superseded by updates. It is your responsibility to ensure that your application meets with your specifications. MICROCHIP MAKES NO REPRESENTATIONS OR WARRANTIES OF ANY KIND WHETHER EXPRESS OR IMPLIED, WRITTEN OR ORAL, STATUTORY OR OTHERWISE, RELATED TO THE INFORMATION, INCLUDING BUT NOT LIMITED TO ITS CONDITION, QUALITY, PERFORMANCE, MERCHANTABILITY OR FITNESS FOR PURPOSE**.** Microchip disclaims all liability arising from this information and its use. Use of Microchip devices in life support and/or safety applications is entirely at the buyer's risk, and the buyer agrees to defend, indemnify and hold harmless Microchip from any and all damages, claims, suits, or expenses resulting from such use. No licenses are conveyed, implicitly or otherwise, under any Microchip intellectual property rights.

QUALITY MANAGEMENT SYSTEM
CERTIFIED BY DNV
═ ISO/TS 16949 ═

Trademarks

The Microchip name and logo, the Microchip logo, dsPIC, FlashFlex, KEELOQ, KEELOQ logo, MPLAB, PIC, PICmicro, PICSTART, PIC^{32} logo, rfPIC, SST, SST Logo, SuperFlash and UNI/O are registered trademarks of Microchip Technology Incorporated in the U.S.A. and other countries.

FilterLab, Hampshire, HI-TECH C, Linear Active Thermistor, MTP, SEEVAL and The Embedded Control Solutions Company are registered trademarks of Microchip Technology Incorporated in the U.S.A.

Silicon Storage Technology is a registered trademark of Microchip Technology Inc. in other countries.

Analog-for-the-Digital Age, Application Maestro, BodyCom, chipKIT, chipKIT logo, CodeGuard, dsPICDEM, dsPICDEM.net, dsPICworks, dsSPEAK, ECAN, ECONOMONITOR, FanSense, HI-TIDE, In-Circuit Serial Programming, ICSP, Mindi, MiWi, MPASM, MPF, MPLAB Certified logo, MPLIB, MPLINK, mTouch, Omniscient Code Generation, PICC, PICC-18, PICDEM, PICDEM.net, PICkit, PICtail, REAL ICE, rfLAB, Select Mode, SQI, Serial Quad I/O, Total Endurance, TSHARC, UniWinDriver, WiperLock, ZENA and Z-Scale are trademarks of Microchip Technology Incorporated in the U.S.A. and other countries.

SQTP is a service mark of Microchip Technology Incorporated in the U.S.A.

GestIC and ULPP are registered trademarks of Microchip Technology Germany II GmbH & Co. & KG, a subsidiary of Microchip Technology Inc., in other countries.

All other trademarks mentioned herein are property of their respective companies.

© 2001-2012, Microchip Technology Incorporated, Printed in the U.S.A., All Rights Reserved.

Printed on recycled paper.

ISBN: 9781620768846

Microchip received ISO/TS-16949:2009 certification for its worldwide headquarters, design and wafer fabrication facilities in Chandler and Tempe, Arizona; Gresham, Oregon and design centers in California and India. The Company's quality system processes and procedures are for its PIC® MCUs and dsPIC® DSCs, KEELOQ® code hopping devices, Serial EEPROMs, microperipherals, nonvolatile memory and analog products. In addition, Microchip's quality system for the design and manufacture of development systems is ISO 9001:2000 certified.

Worldwide Sales and Service

AMERICAS

Corporate Office
2355 West Chandler Blvd.
Chandler, AZ 85224-6199
Tel: 480-792-7200
Fax: 480-792-7277
Technical Support:
http://www.microchip.com/support
Web Address:
www.microchip.com

Atlanta
Duluth, GA
Tel: 678-957-9614
Fax: 678-957-1455

Boston
Westborough, MA
Tel: 774-760-0087
Fax: 774-760-0088

Chicago
Itasca, IL
Tel: 630-285-0071
Fax: 630-285-0075

Cleveland
Independence, OH
Tel: 216-447-0464
Fax: 216-447-0643

Dallas
Addison, TX
Tel: 972-818-7423
Fax: 972-818-2924

Detroit
Farmington Hills, MI
Tel: 248-538-2250
Fax: 248-538-2260

Indianapolis
Noblesville, IN
Tel: 317-773-8323
Fax: 317-773-5453

Los Angeles
Mission Viejo, CA
Tel: 949-462-9523
Fax: 949-462-9608

Santa Clara
Santa Clara, CA
Tel: 408-961-6444
Fax: 408-961-6445

Toronto
Mississauga, Ontario, Canada
Tel: 905-673-0699
Fax: 905-673-6509

ASIA/PACIFIC

Asia Pacific Office
Suites 3707-14, 37th Floor
Tower 6, The Gateway
Harbour City, Kowloon
Hong Kong
Tel: 852-2401-1200
Fax: 852-2401-3431

Australia - Sydney
Tel: 61-2-9868-6733
Fax: 61-2-9868-6755

China - Beijing
Tel: 86-10-8569-7000
Fax: 86-10-8528-2104

China - Chengdu
Tel: 86-28-8665-5511
Fax: 86-28-8665-7889

China - Chongqing
Tel: 86-23-8980-9588
Fax: 86-23-8980-9500

China - Hangzhou
Tel: 86-571-2819-3187
Fax: 86-571-2819-3189

China - Hong Kong SAR
Tel: 852-2943-5100
Fax: 852-2401-3431

China - Nanjing
Tel: 86-25-8473-2460
Fax: 86-25-8473-2470

China - Qingdao
Tel: 86-532-8502-7355
Fax: 86-532-8502-7205

China - Shanghai
Tel: 86-21-5407-5533
Fax: 86-21-5407-5066

China - Shenyang
Tel: 86-24-2334-2829
Fax: 86-24-2334-2393

China - Shenzhen
Tel: 86-755-8864-2200
Fax: 86-755-8203-1760

China - Wuhan
Tel: 86-27-5980-5300
Fax: 86-27-5980-5118

China - Xian
Tel: 86-29-8833-7252
Fax: 86-29-8833-7256

China - Xiamen
Tel: 86-592-2388138
Fax: 86-592-2388130

China - Zhuhai
Tel: 86-756-3210040
Fax: 86-756-3210049

ASIA/PACIFIC

India - Bangalore
Tel: 91-80-3090-4444
Fax: 91-80-3090-4123

India - New Delhi
Tel: 91-11-4160-8631
Fax: 91-11-4160-8632

India - Pune
Tel: 91-20-2566-1512
Fax: 91-20-2566-1513

Japan - Osaka
Tel: 81-6-6152-7160
Fax: 81-6-6152-9310

Japan - Tokyo
Tel: 81-3-6880- 3770
Fax: 81-3-6880-3771

Korea - Daegu
Tel: 82-53-744-4301
Fax: 82-53-744-4302

Korea - Seoul
Tel: 82-2-554-7200
Fax: 82-2-558-5932 or
82-2-558-5934

Malaysia - Kuala Lumpur
Tel: 60-3-6201-9857
Fax: 60-3-6201-9859

Malaysia - Penang
Tel: 60-4-227-8870
Fax: 60-4-227-4068

Philippines - Manila
Tel: 63-2-634-9065
Fax: 63-2-634-9069

Singapore
Tel: 65-6334-8870
Fax: 65-6334-8850

Taiwan - Hsin Chu
Tel: 886-3-5778-366
Fax: 886-3-5770-955

Taiwan - Kaohsiung
Tel: 886-7-213-7828
Fax: 886-7-330-9305

Taiwan - Taipei
Tel: 886-2-2508-8600
Fax: 886-2-2508-0102

Thailand - Bangkok
Tel: 66-2-694-1351
Fax: 66-2-694-1350

EUROPE

Austria - Wels
Tel: 43-7242-2244-39
Fax: 43-7242-2244-393

Denmark - Copenhagen
Tel: 45-4450-2828
Fax: 45-4485-2829

France - Paris
Tel: 33-1-69-53-63-20
Fax: 33-1-69-30-90-79

Germany - Munich
Tel: 49-89-627-144-0
Fax: 49-89-627-144-44

Italy - Milan
Tel: 39-0331-742611
Fax: 39-0331-466781

Netherlands - Drunen
Tel: 31-416-690399
Fax: 31-416-690340

Spain - Madrid
Tel: 34-91-708-08-90
Fax: 34-91-708-08-91

UK - Wokingham
Tel: 44-118-921-5869
Fax: 44-118-921-5820

11/29/12

© 2001-2012 Microchip Technology Inc.

Mouser Electronics

Authorized Distributor

Click to View Pricing, Inventory, Delivery & Lifecycle Information:

Microchip:

TC1240AECHTR TC1240ECHTR